-

ES50HVP/ES90HVP/ES100HVP HIGH VELOCITY AIR HANDLER with 3-Zone Control

Installation, Operation and Maintenance Manual

Ecosmartair
105 Haist Avenue, Unit 10
Vaughan, ON L4L 5V6
905-857-9755
0ecosmartair.com

P/N 14018A

Contents

SAFETY INFORMATION 4
OVERVIEW 5
HVP SECTION 6
PERFORMANCE RATINGS 6
QUICK START-UP PROCEDURES 10
BLOCK DIAGRAM 11
INSTALLATION 12
Clearances 12
Freeze Protection 12
Rear Piping Connections 12
Ecosmart Mounting 12
Plumbing 13
Drain Pan 14
Pump 14
PIPING DIAGRAMS 15
Tankless Water Heater Piping 15
Combi-Boiler Piping 16
ELECTRICAL 17
Electrical Information 17
Electrical Connections Made to Quick Connects 17
HVP 3-Zone Wiring 18
HVP 3-Zone Indicators 18
HVP 3-Zone Electrical Connections 19
HVP 3-Zone Wiring Diagram 20
DIP SWITCH SETTINGS 21
HVP CFM 21
Building Automation Mode 22
HVP Options 23
Calibration Procedure 24
Heating Calibration 24
Cooling Calibration 24

Single Stage Mode....26
Single-stage Operation (Heating)....26
Multistage Mode....27
Multi-stage Operation (Heating)....28
Single-stage/Multi-stage operation (cooling)....29
Dehumidification....29
Fan Mode....29
Constant Low Fan Circulation....29
Condenser Lockout/Freeze Protection....29
Pump Exerciser....29
ZONING SECTION....30
INTRODUCTION....30
FEATURES....30
INSTALLATION....31
INSTALLING TWO DAMPERS PER ZONE....31
OPERATION....31
HRV INTEGRATION....32
ZONE CLOSE SWITCH....33
ZONE OPTIONS SWITCH....33
CONDENSER FREEZE PROTECTION....34
Standard Condenser Freeze Operation....34
Two Stage Condenser Freeze Operation....34
Variable 'Inverting' Condenser Freeze Operation....34
MAINTENANCE AND TROUBLESHOOTING SECTION....35
HVP 3-ZONE PART NUMBERS FOR ORDERING....35
MAINTENANCE....37
Filter....37
Coils....37
Fan and Motor....37
TROUBLESHOOTING....38
Thermostat call error....38
Water heater temperature and pressure relief valve is weeping....38
Cold water at hot faucet....38

Fan runs for cooling but not for heating 38
Fan continues to run in cooling mode when thermostat is satisfied 38
Fan not running 38
Fan is noisy when vents are closed 39
Smart/WiFi thermostat not working properly 39
External pump does not run (sticking issue) 39
External pump does not run (electrical issue) 39
External pump is noisy at start-up 40
Insufficient or no heat 40
Heating during standby mode 40
Pump and fan run continuously 40
Constant Pressure Sensing (CPT) not working 40
Zoning – Fan runs continuously 41
REMOVING BLOWER/CONTROL ASSEMBLY 41
CONTROL ASSEMBLY LAYOUT 42
CONTROL ASSEMBLY LEGEND 43
Final Assembly - Exploded View 44
Electrical Box – Exploded View 45
Blower & Heating Coil – Exploded View 46
Replacement Parts 47
WARRANTY 48

All technical information subject to change without notice.

SAFETY INFORMATION

It is the responsibility of the installer to ensure the installation complies with all national and local building codes and standards, in addition to the instructions outlined in this manual. All applicable codes take precedence over any instructions made in this document.

This symbol indicates safety alerts. When you see this symbol on labels or in this manual, be alert to the potential for personal injury. Understand and pay particular attention to the signal words **DANGER, WARNING,** or **CAUTION.**

DANGER indicates an **imminently** hazardous situation, which if not avoided, **will result in death or serious injury.**

WARNING indicates a **potentially** hazardous situation, which if not avoided, **could result in death or serious injury.**

CAUTION indicates a **potentially** hazardous situation, which if not avoided, **may result in minor or moderate injury.** It is also used to alert against unsafe practices and hazards involving only property damage.

	WARNING - Improper installation may create a condition where the operation of the product could cause personal injury or property damage. Only a qualified contractor, installer or service agency should install this product. Improper installation, adjustment, alteration, service or maintenance can cause injury or property damage. Refer to this manual for assistance.
	CAUTION - This product must be installed in strict compliance with the installation instructions and any applicable local, state, and national codes including, but not limited to; building, electrical, and mechanical codes.
	WARNING - FIRE OR ELECTRICAL HAZARD. Failure to follow the safety warnings exactly could result in serious injury, death, or property damage. A fire or electrical hazard may result causing property damage, personal injury or loss of life.
	WARNING - Hot water from a boiler used to satisfy heating requirements can be heated to temperatures of 180°F. Parts containing water this hot can scald very quickly. Use extreme caution when servicing or performing maintenance on any parts containing hot water. To avoid severe burns, allow equipment to cool before performing maintenance.

OVERVIEW

The **ecosmart** HVP 3-ZONE is an advanced technology hydronic air handler with zone control built in. Up to three zones can be independently controlled with their own thermostat, and together with constant pressure technology (CPT), can regulate air flow irrespective of opening/closing zones.

The HVP 3-ZONE control board incorporates two separate control systems – one for the HVP air handler and the other for Zoning. This manual is organized in three parts:

HVP Air Handler

- Simple, independent heat/cool airflows and system parameters that can easily be set by the installer to adjust for a wide variety of installations.
- Constant Pressure Technology (CPT) automatically maintains the desired static pressure within the ductwork irrespective of zones and outlet vents opening and closing.
- Single or multi-stage operation.
- Low circulating fan option.
- Dehumidification cooling option.
- Building automation option.

Zoning Control

- Simple setup for up to three independent zones.
- Each zone can simultaneously control two dampers – supply and return.
- Supports standard or 'smart' thermostats.
- Smart multi-zone control algorithm.
- Supports standard, 2-stage and variable condensers.
- Cooling coil freeze sensor prevents freeze ups.

Maintenance and Troubleshooting

- HVP 3-Zone part numbers for ordering
- Troubleshooting
- Removing blower/control assembly
- Control assembly layout and legend
- Replacement parts
- Warranty

HVP SECTION

PERFORMANCE RATINGS

50HVP

Performance Data - Hot Water Capacities (BTUH) @ 70°F Entering Air Temperature									WATER PD ('WC) @140°F
Entering Water Temperature									
CFM	GPM	120°F	130°F	140°F	150°F	160°F	170°F	180°F	
300	3	15070	18110	21160	24200	27260	30310	33370	2.32
	4	15380	18470	21570	24680	27780	30880	33990	3.87
	5	15550	18680	21810	24940	28070	31210	34340	5.77
400	3	19060	22930	26790	30670	34550	38440	42330	2.32
	4	19680	23650	27630	31610	35600	39600	43590	3.87
	5	20030	24070	28110	32150	36210	40260	44310	5.77
500	3	22550	27130	31730	36340	40960	45580	50210	2.32
	4	23540	28300	33080	37870	42660	47460	52270	3.87
	5	24120	29000	33880	38770	43670	48570	53480	5.77
600	3	25590	30810	36050	41300	46570	51840	57130	2.32
	4	27000	32490	37990	43500	49020	54550	60090	3.87
	5	27860	33500	39160	44820	50500	56180	61870	5.77
700	3	28260	34040	39840	45660	51500	57340	63200	2.32
	4	30110	36250	42400	48570	54750	60940	67150	3.87
	5	31270	37620	43980	50360	56760	63160	69570	5.77

50HVP ECM blower performance (CFM/amps)

SWITCH SETTING	0.8" WC	0.9" WC	1" WC	1.1" WC	1.2" WC	1.3" WC	1.4" WC	1.5" WC
55%	446 2.7	433 2.76	415 2.82	406 2.89	385 2.95	378 3.02	362 3.11	338 3.19
60%	478 2.88	455 2.95	439 3.01	436 3.07	419 3.14	407 3.19	380 3.23	367 3.35
70%	536 3.52	521 3.61	516 3.64	492 3.73	484 3.76	465 3.85	448 3.89	438 3.98
75%	577 3.9	558 3.96	545 4.02	533 4.07	524 4.14	510 4.17	502 4.25	478 4.35
80%	617 4.26	598 4.37	587 4.38	575 4.52	555 4.56	544 4.59	531 4.68	512 4.76
85%	642 4.67	618 4.68	611 4.79	585 4.85	582 4.9	570 4.93	563 5.02	545 5.11
90%	680 5.26	666 5.29	652 5.38	633 5.4	621 5.5	605 5.52	600 5.62	582 5.73
100%	722 5.9	712 5.98	687 6	678 6.11	672 6.14	670 6.17	660 602	625 6.37

90HVP

Performance Data - Hot Water Capacities (BTUH) @ 70°F Entering Air Temperature									WATER PD ('WC) @140°F
Entering Water Temperature									
CFM	GPM	120°F	130°F	140°F	150°F	160°F	170°F	180°F	
400	4	20260	24350	28440	32540	36640	40750	44860	1.32
	5	20590	24730	28880	33040	37190	41360	45520	1.95
	7	20930	25140	29350	33560	37770	41990	46210	3.55
500	4	24390	29330	34280	39230	44200	49170	54140	1.32
	5	24960	30000	35050	40100	45160	50230	55300	1.95
	7	25570	30720	35880	41040	46200	51370	56540	3.55
600	4	28130	33840	39570	45310	51060	56820	62590	1.32
	5	28990	34860	40740	46630	52530	58440	64360	1.95
	7	29940	35980	42030	48080	54150	60220	66290	3.55
700	4	31550	37930	44370	50820	57290	63770	70260	1.32
	5	32700	39330	45990	52650	59330	66020	72720	1.95
	7	34030	40910	47810	54710	61630	68550	75480	3.55
800	4	34570	41620	48710	55810	62930	70070	77220	1.32
	5	36100	43450	50820	58200	65600	73020	80440	1.95
	7	37870	45550	53240	60940	68660	76390	84120	3.55
900	4	37330	44970	52640	60340	68050	75790	83540	1.32
	5	39230	47230	55260	63310	71390	79470	87570	1.95
	7	41480	49890	58330	66790	75270	83750	92250	3.55

90HVP ECM blower performance (CFM/amps)

SWITCH SETTING	0.8" WC	0.9" WC	1" WC	1.1" WC	1.2" WC	1.3" WC	1.4" WC	1.5" WC
65%	672 4.53	654 4.58	637 4.62	615 4.68	587 4.79	565 4.8	550 4.92	532 4.93
70%	712 4.94	697 5.03	682 5.07	665 5.19	634 5.25	618 5.28	590 5.4	578 5.41
75%	743 5.35	737 5.39	718 5.46	687 5.53	672 5.62	655 5.69	625 5.77	611 5.83
80%	782 5.93	762 6.05	751 6.1	744 6.13	719 6.16	707 6.29	682 6.36	663 6.37
85%	822 6.5	804 6.58	795 6.66	780 6.73	773 6.79	757 6.8	733 6.96	720 6.98
90%	865 7.19	840 7.23	837 7.25	821 7.35	817 7.41	786 7.43	769 7.56	752 7.67
95%	883 7.67	878 7.73	856 7.76	852 7.77	832 7.87	820 7.9	803 8.02	778 8.11
100%	920 8.15	898 8.16	887 8.28	876 8.34	863 8.4	854 8.43	839 8.47	815 8.49

100HVP

Performance Data - Hot Water Capacities (BTUH) @ 70°F Entering Air Temperature									WATER PD ('WC) @140°F
Entering Water Temperature									
CFM	GPM	120°F	130°F	140°F	150°F	160°F	170°F	180°F	
700	4	32060	38550	45060	51590	58120	64660	71210	3.87
	5	33150	39860	46570	53300	60030	66770	73520	5.79
	7	34380	41310	48250	55200	62150	69110	76070	10.69
800	4	35260	42410	49590	56790	63990	71210	78430	3.87
	5	36690	44130	51580	59040	66510	73990	81480	5.79
	7	38330	46070	53820	61580	69350	77130	84910	10.69
900	4	38160	45930	53720	61520	69340	77170	85010	3.87
	5	39970	48070	56200	64350	72510	80680	88860	5.79
	7	42050	50550	59070	67600	76140	84690	93250	10.69
1000	4	40810	49130	57470	65840	74220	82610	91020	3.87
	5	42990	51730	60490	69270	78060	86870	95690	5.79
	7	45550	54770	64010	73270	82540	91830	101120	10.69
1100	4	43230	52050	60900	69780	78670	87590	96510	3.87
	5	45790	55110	64450	73820	83210	92610	102030	5.79
	7	48850	58750	68680	78620	88580	98550	108540	10.69
1200	4	45430	54710	64030	73380	82750	92130	101530	3.87
	5	48380	58240	68130	78040	87980	97940	107900	5.79
	7	51950	62500	73070	83660	94280	104900	115540	10.69

100HVP ECM blower performance (CFM/amps)

SWITCH SETTING	0.8" WC	0.9" WC	1" WC	1.1" WC	1.2" WC	1.3" WC	1.4" WC	1.5" WC
65%	1043 4.24	1012 4.41	989 4.56	950 4.71	914 4.85	858 4.98	812 5.10	782 5.17
70%	1106 4.65	1073 4.77	1047 4.90	1016 5.02	985 5.14	937 5.28	886 5.44	842 5.58
75%	1150 5.04	1128 5.14	1092 5.26	1070 5.41	1041 5.55	1004 5.71	964 5.84	918 5.96
80%	1175 5.22	1160 5.35	1137 5.49	1107 5.61	1079 5.82	1054 5.93	1021 6.08	970 6.22
85%	1215 5.55	1202 5.68	1172 5.80	1150 5.95	1116 6.10	1092 6.23	1054 6.38	1028 6.49
90%	1275 5.98	1259 6.16	1238 6.32	1212 6.44	1192 6.60	1164 6.74	1134 6.87	1095 7.08
95%	1324 6.44	1299 6.58	1280 6.74	1259 6.87	1233 7.04	1204 7.17	1193 7.35	1162 7.49
100%	1368 6.86	1347 7.04	1330 7.14	1305 7.34	1283 7.50	1262 7.62	1233 7.77	1215 7.90

SPECIFICATIONS

PHYSICAL DATA - INCHES											
Model	**Overall Dimensions W x D x H**			**Supply Opening W x D**		**Side Return**				**Piping Location**	
	A	B	C	D	E	F	G	H	I	J	K
50HVP	14.0	21.0	29.0	8.0	1.8	18.3	14.3	1.4	2.0	2.8	2.4
90HVP	21.0	21.0	29.0	8.0	1.8	18.3	14.3	1.4	2.0	2.8	2.4
100HVP	21.0	21.0	29.0	10.0	1.8	18.3	14.3	1.4	2.0	2.8	2.4

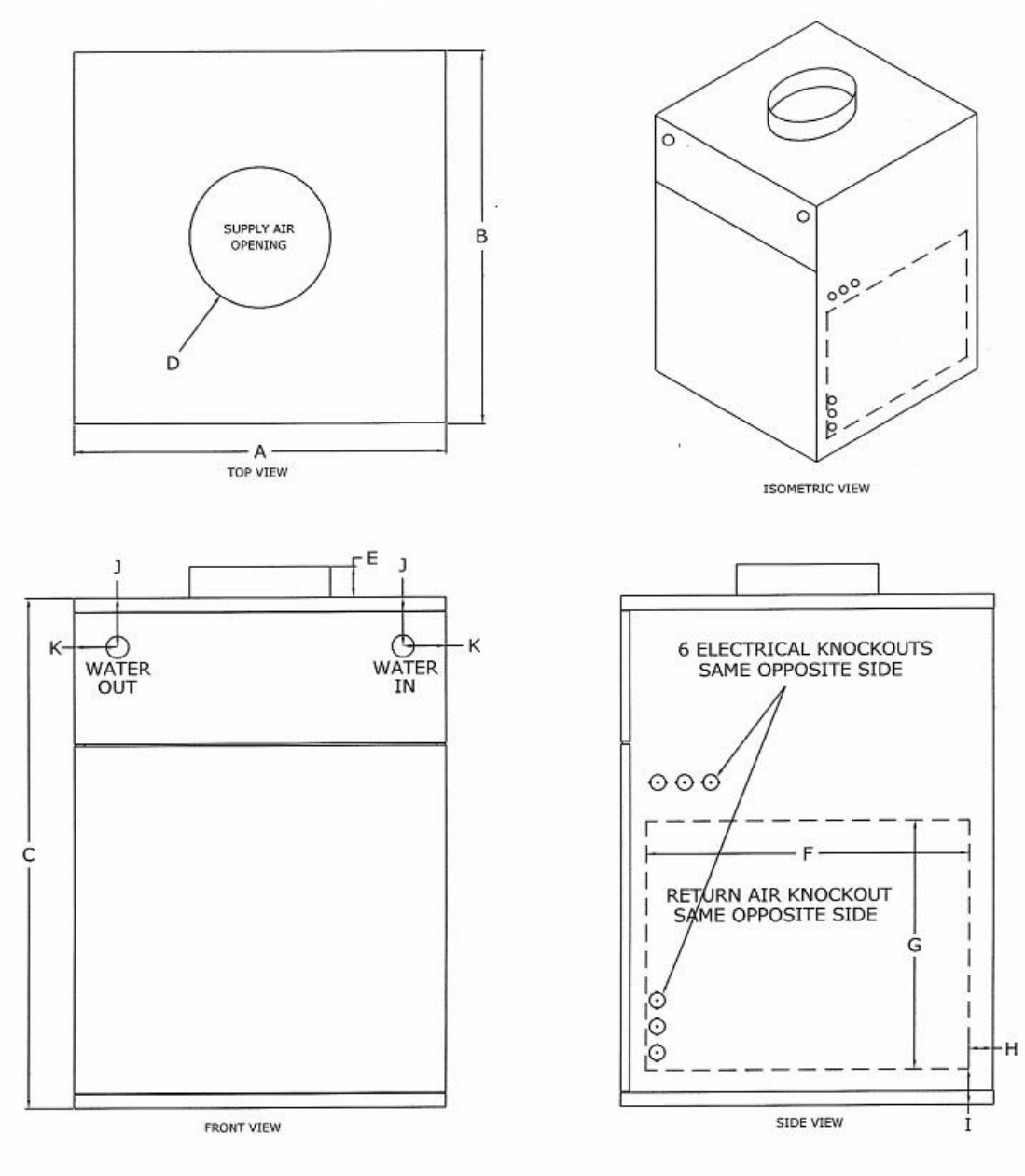

MODEL	50HVP	90HVP	100HVP
DX Cooling Capacity (tons)	1 to 2	2 to 2.5	2 to 3
Power (Volts/Phase/Hz)	120/1/60	120/1/60	120/1/60
Cabinet Size W x D x H (in)	14 x 21 x 29	21 x 21 x 29	21 x 21 x 29
Supply Air Opening D (in)	8	8	10
Side Return Air Opening (in)	18.3 X 14.3	18.3 X 14.3	18.3 X 14.3
Recommended Filter Size (in)	16 x 20	16 x 20	16 x 20
Shipping Weight (lb)	85	95	98
Shipping Dimensions W x D x H (in)	15 x 24 x 30.5	22 x 24 x 30.5	22 x 24 x 30.5

QUICK START-UP PROCEDURES

Refer to the installation instructions before following the start-up procedures.

1. Fill the system with water. Do not start the system.
2. Purge all air from the system. Isolation and purge valves are strongly recommended.
3. Purge all air from the space heating loop by closing the isolation valve on the return leg of the loop and open the drain to purge air. Open the return leg isolation valve and then close the drain valve.
4. Start the hot water generating equipment per the manufacturer's recommendations. Set the design water temperature to deliver the necessary number of BTUs to the air handler.
5. Once all air has been purged, turn on the power to the **ecosmart** and set the room thermostat to heat and set the temperature high enough to initiate a call for heat. This will energize the air handler an in turn the fan and pump.
6. Once the heat source is supplying hot water, check supply and return pipes for a temperature difference to make sure there is flow. There should be a noticeable difference in temperature between supply and return lines. Use caution when supply water temperature is above 120°F / 49°C.

BLOCK DIAGRAM

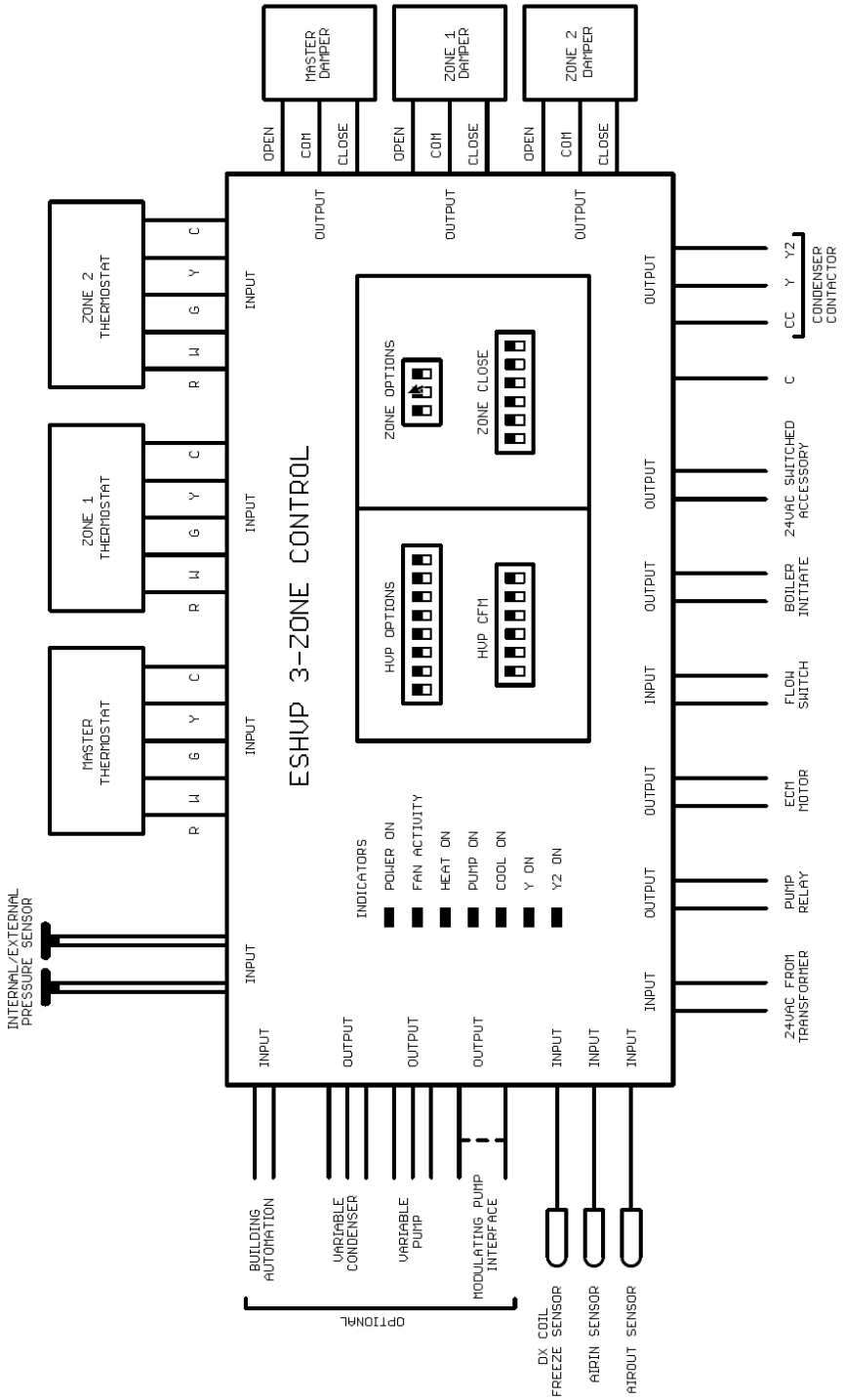

INSTALLATION

The installer must comply with all local and national code requirements pertaining to the installation of this equipment.

Clearances

The **ecosmart** is approved for up-flow, down-flow, and horizontal configurations. Clearances do not change with orientation. This hydronic furnace is for indoor installation only.

	Clearance from Combustibles (in)	Recommended Service Clearance (in)
Top	0	0
Bottom	0	0
Front	0	24
Back	0	0
Sides	0	0

Freeze Protection

It is not recommended to install the **ecosmart** in an unheated space.
Should the **ecosmart** be installed in an area where the ambient temperature may fall below freezing, ethylene or propylene glycol should be added into the hydronic heating system to protect against damage, which would not be covered under warranty. Make sure the glycol is compatible with all system components and is permitted by local and national codes.

Rear Piping Connections

The heating coil may be reversed to allow rear piping:

- Remove upper door
- Disconnect supply air sensor from extension cable
- Slide out heating coil
- Re-mount supply air sensor and grommet to opposite end of heating coil
- Remove rear knockouts
- Slide in heating coil
- Use plastic plugs (provided) to close up holes on upper door

Ecosmart Mounting

The **ecosmart** can be installed in up flow, down flow and left or right horizontal applications. Install the **ecosmart** with the door in place to make sure the cabinet remains square. Flip the unit for down flow applications so that the top of the unit is now the bottom. No modification is required for any configuration.

The **ecosmart** can be suspended from floor joists, rafters or concrete using rods, pipe, angle supports or straps. Units must be hung level to ensure quiet operation. Vibration isolation devices are strongly recommended.

CAUTION - Use any of the existing screw holes in the cabinet when using straps. If the existing screw is too short for securing a mounting strap, a longer screw should be used provided care is taken not to damage any internal components. Product warranty does not cover any damage or claims resulting from damage from longer screws or from the unit being improperly suspended.

The cabinet is designed so that the return air can be located on either side of the cabinet, or from the bottom of the cabinet. Position a filter rack so that the filter is readily accessible. A filter and filter rack are not included. Sides have pre-cut knockouts for a standard 16 x 20 in filter rack.

WARNING - Special care should be taken in the vicinity of the coil to avoid puncture. Screw into opening flange instead of top of cabinet when fastening the supply air duct.

Plumbing

Install a sediment faucet or ball valve for use as a drain/purge valve. The drain valve must be located downstream of the pump and check valve, and upstream of the isolation valve (if isolation valve is present). With this arrangement, any air trapped in the system can easily be flushed out following the instructions in the Start-up & Troubleshooting sections. Isolation valves are recommended, but not required. Installing isolation valves facilitates easy servicing.

When the space heating loop connections are made to the domestic water connections:

- The heating loop connections should be positioned horizontally in a vertical section of the domestic water line for both inlet and outlet. Refer to the piping schematic for details.
- Connect the heating loop to the domestic water connections as close to the water heater as possible

Avoid sections of pipe in the heating loop that can trap air where possible. It is usually impossible to install a system without having at least one part of the system or heating coil able to trap air. This will not be a problem if the connection to the domestic water lines is made properly, and purge valves and air eliminator devices are installed.

- Following the flushing procedures in the start-up section will ensure that there is no air in the system after initial set-up.

Follow recommendations supplied by the manufacturer of the heating source being used. **ecosmart** includes a flow switch connection where a flow switch can be connected to allow for domestic water

priority. Note: the correct type of flow switch is a normally open (NO) device. The flow switch contacts close when domestic water is flowing.

Check Valve

A check valve may be required for your system to meet local codes and to work effectively. A check valve:

- Protects against back-flow of water to avoid short circuiting around the water heater during domestic use
- Protects against thermal siphoning
- Is required in all potable water systems

Drain Pan

A drain pan is recommended underneath the appliance for all installations in case of heat exchange failure.

Pump

A pump is not included inside the **ecosmart**. Whether you are using an external pump or an internal built-in pump, it should be sized for the system. Pumps supplied with the heat generating units can be used as the sole pump provided it meets the needs of the system. This is especially the case in retrofit applications where a much larger pump may have previously been used in the system.

- When set up in multi-stage mode, the pump will operate as a 3-speed pump if it is a variable 0-10V type. If the pump is a standard 120VAC type, it will operate at a single speed only.
- When set up in single-stage mode, the pump will operate as a single-speed pump.
- The **ecosmart** controller has a built-in pump timer that exercises the pump for 1 minute every 24 hours to prevent the possibility of 'sticking' due to sediment etc.

Water Heater or Boiler Setup

Follow the manufacturer's installation and start-up instructions of the water heater or boiler. Make sure the equipment is turned off during installation and service. Make certain the equipment has been refilled and all air is purged from the system before turning on the heater.

WARNING - When the system requires water temperatures higher than 120°F, a mixing valve shall be installed to reduce domestic hot water temperature to safeguard against scalding.

Combo Systems

The **ecosmart** is ideal for use in combo systems which provide space heating and domestic hot water from a single heat source. Any properly sized gas, propane or oil-fired water heater or boiler will work in a combo system. Make sure any water heater being used is approved for combo applications.

PIPING DIAGRAMS

Tankless Water Heater Piping

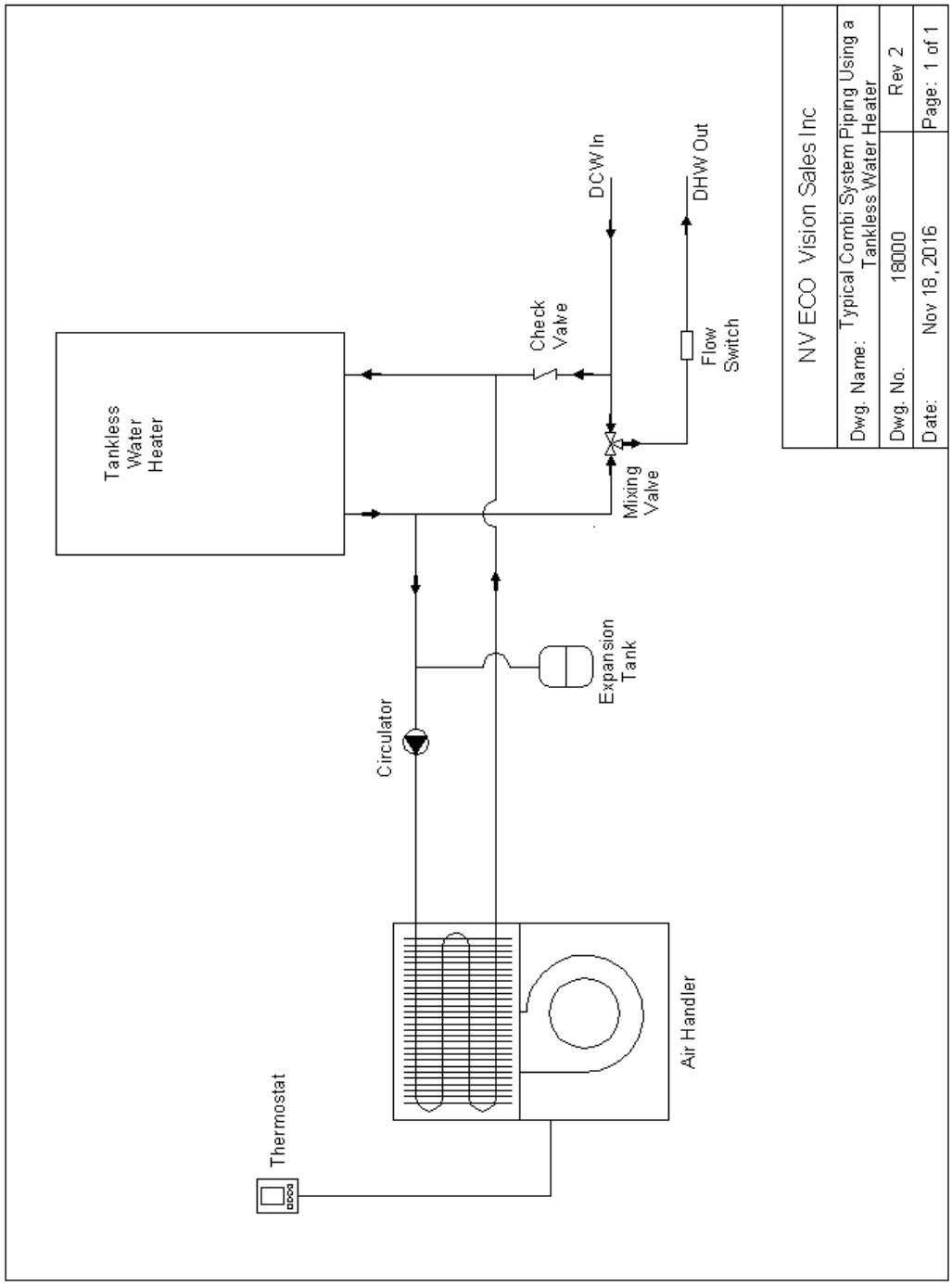

Combi-Boiler Piping

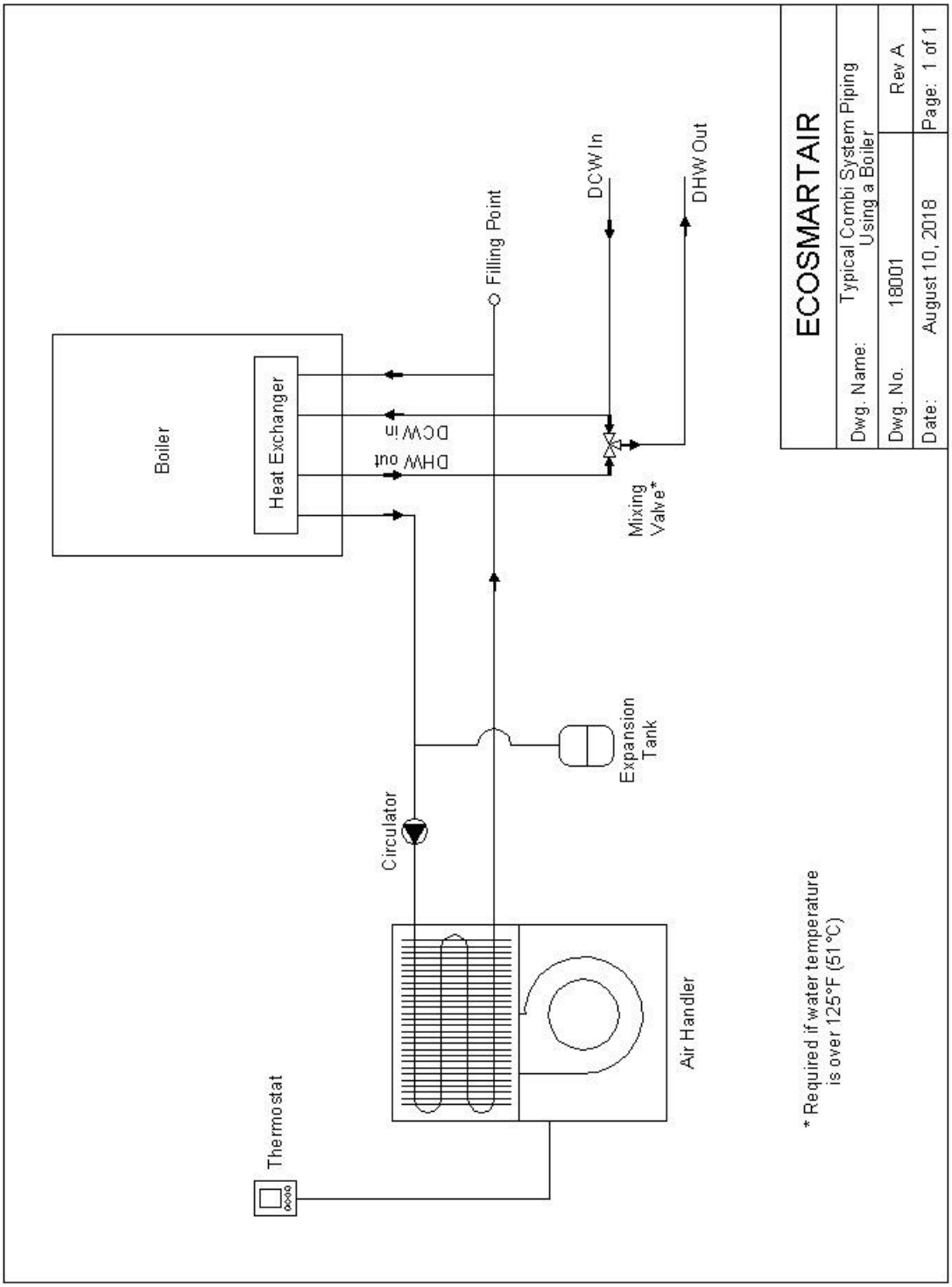

ELECTRICAL

WARNING - Make sure the installation meets all national and local electrical codes.

Electrical Information

The **ecosmart** wiring diagram is located on the cover of the electrical box behind the lower front panel. Ratings data is located on the lower front panel.

- The **ecosmart** operates on 120VAC 60Hz single phase line voltage and should have its own dedicated breaker or fuse rated as per the MOP on the ratings label
- All control circuits are standard 24VAC
- **ecosmart** must be grounded via the green wire within the control box
- Normal connections are made via screw-type terminal blocks. Other connections are made using Quick Connects

Electrical Connections Made to Quick Connects

- Stranded or solid wire may be used
- Male tab size on control board: 0.250 in x 0.032 in
- Correct female disconnects to mate with male tabs:
    - Wire range: 22-18 AWG (Red) Panduit # DNF18-250 or equivalent
      Wire range: 16-14 AWG (Blue) Panduit # DNF14-250 or equivalent

- Use a quality ratchet crimping tool to ensure reliable connections

HVP 3-Zone Wiring

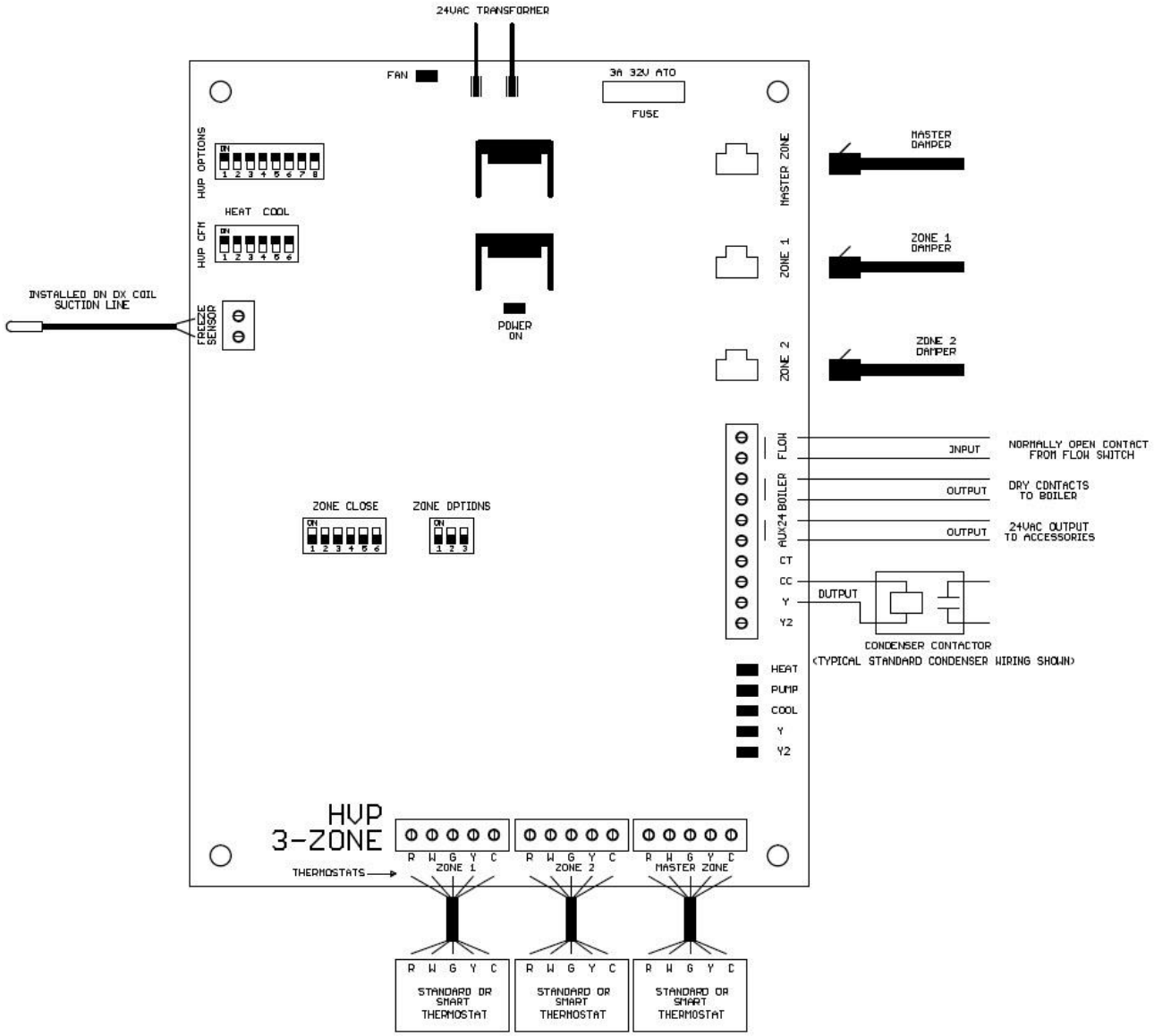

HVP 3-Zone Indicators

FAN	Lights when fan activity signal is present. Intensity varies with fan speed.
POWER ON	Lights when 24VAC power is present.
HEAT	Lights when heating.
PUMP	Lights when pump is on.
COOL	Lights when cooling.
Y	Lights when Y is active (condenser control).
Y2	Lights when Y2 is active (condenser control).

HVP 3-Zone Electrical Connections

DAMPER JACKS	Connect up to three 24VAC dampers using RJ11 cables up to 50ft. May control up to two dampers per zone using a standard telephone line splitter.
FLOW	When using a water heater and domestic hot water (DHW) priority is required, connect a normally open (NO) flow switch. If there is a call for DHW, fan and pump will shut down after 1 minute. If flow switch is active longer than 30 minutes, fan and pump will resume normal operation.
BOILER	Dry contact to initiate heat source. Active when heating is on.
AUX24V	24VAC output for humidifier or other accessory. Active when heating is on.
CT	Additional 'Always On C' to supply power to 'Smart' thermostats. Same as thermostat 'C' connection.
CC	'Interrupted C' for condenser contactor Turns off when cooling coil suction line goes below 40°F
Y	Condenser contactor Y connection
Y2	Condenser contactor Y2 connection
R	Thermostat R connection
W	Thermostat W connection
G	Thermostat G connection
Y	Thermostat Y connection
C	Thermostat C connection
MODPUMP	Connects to optional pump drive module P/N 15018. Replaces standard pump relay and allows **variable control** of a standard 120VAC pump up to 250W.
VARPUMP PWM	Variable pump PWM output (optional)
VARPUMP COM	COMMON
VARPUMP 10V	Variable pump 0-10V output (optional)
VARCOND PWM	Variable condenser PWM output (optional)
VARCOND COM	COMMON
VARCOND 10V	Variable condenser 0-10V output (optional)
FREEZE SENSOR	Freeze sensor (DX coil suction line). **This must be connected otherwise fan and pump will continuously run.**
BAS	Remote control for building automation (0-10V)

HVP 3-Zone Wiring Diagram

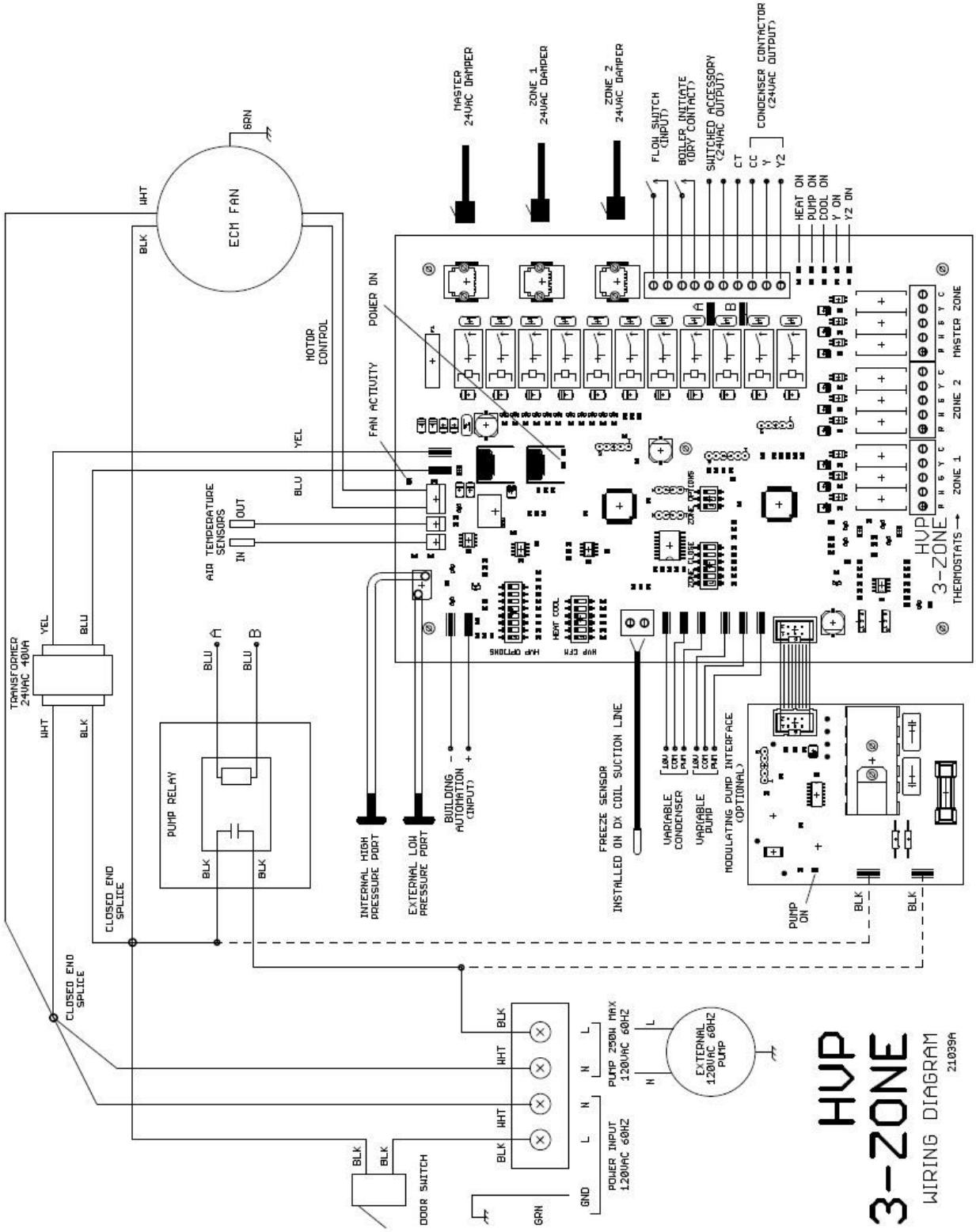

DIP SWITCH SETTINGS

WARNING – to prevent damage, use a small screwdriver or equivalent to change switch position.
Up is ON as marked on the switch body and each switch is identified with numbers below.

HVP CFM

Switches 1-3 control **heating** CFM (8 settings)
Switches 4-6 control **cooling** CFM (8 settings)

HEAT/COOL SETTINGS 50HVP											
FAN CFM								AIR FLOW SETTING	1 4	2 5	3 6
0.8”	0.9”	1.0”	1.1”	1.2”	1.3”	1.4”	1.5”				
446	433	415	406	385	378	362	338	55%	OFF	OFF	OFF
478	455	439	436	419	407	380	367	60%	ON	OFF	OFF
536	521	516	492	484	465	448	438	70%	OFF	ON	OFF
577	558	545	533	524	510	502	478	75%	ON	ON	OFF
617	598	587	575	555	544	531	512	80%	OFF	OFF	ON
642	618	611	585	582	570	563	545	85%	ON	OFF	ON
680	666	652	633	621	605	600	582	90%	OFF	ON	ON
722	712	687	678	672	670	660	625	100%	ON	ON	ON

HEAT/COOL SETTINGS 90HVP								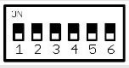			
FAN CFM								AIR FLOW SETTING	1 4	2 5	3 6
0.8”	0.9”	1.0”	1.1”	1.2”	1.3”	1.4”	1.5”				
672	654	637	615	587	565	550	532	65%	OFF	OFF	OFF
712	697	682	665	634	618	590	578	70%	ON	OFF	OFF
743	737	718	687	672	655	625	611	75%	OFF	ON	OFF
782	762	751	744	719	707	682	663	80%	ON	ON	OFF

822	804	795	780	773	757	733	720	85%	OFF	OFF	ON
865	840	837	821	817	786	769	752	90%	ON	OFF	ON
883	878	856	852	832	820	803	778	95%	OFF	ON	ON
920	898	887	876	863	854	839	815	100%	ON	ON	ON

HEAT/COOL SETTINGS 100HVP											
FAN CFM								AIR FLOW SETTING	1 4	2 5	3 6
0.8”	0.9”	1.0”	1.1”	1.2”	1.3”	1.4”	1.5”				
1043	1012	989	950	914	858	812	782	65%	OFF	OFF	OFF
1106	1073	1047	1016	985	937	886	842	70%	ON	OFF	OFF
1150	1128	1092	1070	1041	1004	964	918	75%	OFF	ON	OFF
1175	1160	1137	1107	1079	1054	1021	970	80%	ON	ON	OFF
1215	1202	1172	1150	1116	1092	1054	1028	85%	OFF	OFF	ON
1275	1259	1238	1212	1192	1164	1134	1095	90%	ON	OFF	ON
1324	1299	1280	1259	1233	1204	1193	1162	95%	OFF	ON	ON
1368	1347	1330	1305	1283	1262	1233	1215	100%	ON	ON	ON

Building Automation Mode

(Force all dampers open by setting ZONE OPTIONS 3 switch to ON before using BAS).
Set HVP OPTIONS switch 5 to ON. (**Thermostat function is disabled)**.

- **BAS INPUT** – input command 0-10V
  - **Fan:** 0V = off, 2V = low speed varying to 10V = high speed.
  - **Pump (variable or standard if installed):** 0V = off, 1V or higher = on.

HVP Options

HVP OPTIONS		
1	OFF	Constant circulating fan runs at HEAT airflow
	ON	Constant low circulating fan (runs at 50% of HEAT airflow)
2	OFF	Single stage operation
	ON	Multistage operation
3	OFF	Cooling fan runs at COOL airflow
	ON	Dehumidification - Cooling fan runs at 85% of COOL airflow for 10 minutes and then reverts to COOL airflow
4	OFF	Fixed airflow control
	ON	Automatic airflow control (CPT) – **must be calibrated before use.**
5	OFF	Normal thermostat input control. Building automation is disabled.
	ON	Building Automation System control (0 – 10V input). Thermostat connections are disabled. **(Force all dampers open by setting ZONE OPTIONS 3 switch to ON before using).**
6	OFF	CPT heat calibration mode off
	ON	CPT heat calibration mode on - acquires heating static pressure reference
7	OFF	CPT cool calibration mode off
	ON	CPT cool calibration mode on - acquires cooling static pressure reference
8	OFF	Not used
	ON	Not used

Calibration Procedure

Constant Pressure Technology (CPT) automatically maintains the desired airflow within the ductwork irrespective of zones or outlet vents opening and closing thereby reducing the potential for airflow noise.

Two values of CPT are stored: one for heating and the other for cooling. **It is recommended to calibrate both heating and cooling at the time of installation.** This allows for correct fan operation under CPT.

NOTE: It is important to set all zone dampers to the open position before attempting calibration.

Heating Calibration

STEP 1

Set all thermostats to the OFF position.

STEP 2

Set HVP OPTION 4 switch to the OFF position.

STEP 3

Set ZONE OPTION 3 switch to the ON position (forces all dampers open). Allow sufficient time for all dampers to open.

STEP 4

Set desired heating airflow rate using the HEAT switch.

STEP 5

Set HVP OPTION 6 switch to the ON position and allow the system to run for at least 1 minute, then set HVP OPTION 6 switch to the OFF position. The heating calibration parameter is now permanently stored in the controller and will be retained even if power is removed from the **ecosmart.**

If the heating airflow rate setting is changed, calibration must be repeated for correct operation.

STEP 6

Set ZONE OPTION 3 switch to the OFF position for normal operation. Allow sufficient time for all dampers to close.

STEP 7

Set HVP OPTION 4 switch to the ON position to enable CPT.

STEP 8

Operate thermostats as required.

Cooling Calibration

STEP 1

Set all thermostats to the OFF position.

STEP 2

Set HVP OPTION 4 switch to the OFF position.

STEP 3

Set ZONE OPTION 3 switch to the ON position (forces all dampers open). Allow sufficient time for all dampers to open.

STEP 4

Set desired cooling airflow rate using the COOL switch.

STEP 5

Set HVP OPTION 7 switch to the ON position and allow the system to run for at least 1 minute, then set HVP OPTION 7 switch to the OFF position. The cooling calibration parameter is now permanently stored in the controller and will be retained even if power is removed from the **ecosmart.**

If the cooling airflow rate setting is changed, calibration must be repeated for correct operation.

STEP 6

Set ZONE OPTION 3 switch to the OFF position for normal operation. Allow sufficient time for all dampers to close.

STEP 7

Set HVP OPTION 4 switch to the ON position to enable CPT.

STEP 8

Operate thermostats as required.

Single Stage Mode

- HVP OPTIONS switch 2 is OFF. Fan runs at selected airflows.
- Standard pump: connect to main power entry terminal block.
- Optional variable speed pump: connect between COM and 10V on the VARPUMP tabs.

HVP CFM 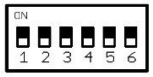				HVP OPTIONS 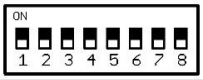
Switch 1 (Heat) Switch 4 (Cool)	Switch 2 (Heat) Switch 5 (Cool)	Switch 3 (Heat) Switch 6 (Cool)	AIR FLOW	Switch 2
OFF	OFF	OFF	55%	OFF
ON	OFF	OFF	60%	OFF
OFF	ON	OFF	70%	OFF
ON	ON	OFF	75%	OFF
OFF	OFF	ON	80%	OFF
ON	OFF	ON	85%	OFF
OFF	ON	ON	90%	OFF
ON	ON	ON	100%	OFF

Single-stage Operation (Heating)

- R is connected to W
- Heat generator is turned on
- Auxiliary 24VAC power is turned on
- Pump turns on at 100%
- After a 15 second delay to allow for system water to heat up coil, fan ramps up to selected static pressure
- If a variable speed pump is installed, it runs at HI. If a standard single speed AC pump is installed it runs at HI

Thermostat is satisfied

- R is disconnected from W
- Heat generator is turned off
- Auxiliary 24VAC power is turned off
- Pump turns off and fan speed ramps down to zero, extracting any remaining heat in the coil

Multistage Mode

- HVP OPTIONS switch 2 is ON. Fan increases airflow through stages 1 to 3 with 5-minute intervals until stage 3 is reached.
- Standard pump: connect to main power entry terminal block.
- Optional variable speed pump: connect between COM and 10V on the VARPUMP tabs. Pump operates at 3 speeds in unison with the fan stages as shown in table.

HVP CFM 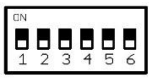					HVP OPTIONS 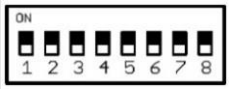		
Switch 1 (Heat)) Switch 4 (Cool)	Switch 2 (Heat) Switch 5 (Cool)	Switch 3 (Heat) Switch 6 (Cool)	AIR FLOW SETTING	STAGE	MULTI STAGE SELECTED	VARIABLE PUMP SPEED	STANDARD PUMP SPEED
					Switch 2	0-10VDC	120VAC
OFF	OFF	OFF	55%	3	ON	HI	HI
			47%	2	ON	MED	HI
			39%	1	ON	LO	HI
ON	OFF	OFF	60%	3	ON	HI	HI
			51%	2	ON	MED	HI
			42%	1	ON	LO	HI
OFF	ON	OFF	70%	3	ON	HI	HI
			60%	2	ON	MED	HI
			49%	1	ON	LO	HI
ON	ON	OFF	75%	3	ON	HI	HI
			64%	2	ON	MED	HI
			53%	1	ON	LO	HI
OFF	OFF	ON	80%	3	ON	HI	HI
			68%	2	ON	MED	HI
			56%	1	ON	LO	HI
ON	OFF	ON	85%	3	ON	HI	HI

			72%	2	ON	MED	HI
			60%	1	ON	LO	HI
OFF	ON	ON	90%	3	ON	HI	HI
			77%	2	ON	MED	HI
			63%	1	ON	LO	HI
ON	ON	ON	100%	3	ON	HI	HI
			85%	2	ON	MED	HI
			70%	1	ON	LO	HI

Multi-stage Operation (Heating)

Thermostat calls for heat

- R is connected to W
- Heat generator is turned on
- Auxiliary 24VAC power is turned on
- Pump turns on 100%
- After a 15 second delay to allow for system water to heat up coil, fan ramps up as follows:
    1. **Stage 1 - Lower HEAT airflow for 5 minutes**
       If a variable speed pump is installed, it runs at LO. If a standard single speed AC pump is installed it runs at HI.

    2. **Stage 2 - Medium HEAT airflow for 5 minutes**
       If a variable speed pump is installed, it runs at MED. If a standard single speed AC pump is installed it runs at HI.

    3. **Stage 3 - High HEAT airflow until thermostat is satisfied**
       If a variable speed pump is installed, it runs at HI. If a standard single speed AC pump is installed it runs at HI.

Thermostat is satisfied

- R is disconnected from W
- Heat generator is turned off
- Auxiliary 24VAC power is turned off
- Pump turns off and fan speed ramps down to zero, extracting any remaining heat in the coil
- Auxiliary 24VAC power is turned off
- Pump turns off and fan speed ramps down to zero, extracting any remaining heat in the coil

Single-stage/Multi-stage operation (cooling)

- R is connected to Y.
- Condenser turns on (typical standard condenser contactor connected between CC and Y).

Dehumidification

When in cooling mode, a dehumidification function can be set using HVP OPTION 3 switch 3 as follows:

- OFF - Normal cooling fan runs at rate set by COOL airflow.
- ON – Dehumidification Fan Cooling runs at 85% of COOL airflow rate for 10 min. and then reverts to COOL airflow.

Fan Mode

- R is connected to G.
- If fan is set to “ON” on thermostat, fan runs at HEAT airflow rate.

Constant Low Fan Circulation

Fan may be run at a low rate using OPTION switch 1 as follows:

- OPTION switch 1 is OFF – fan runs at HEAT airflow rate
- OPTION switch 1 is ON – fan runs at 50% of HEAT airflow rate

Condenser Lockout/Freeze Protection

The **ecosmart** is equipped with a condenser lockout / freeze protection sensor to help prevent any damage to the hot water coil from a freeze up. In any mode, heating, cooling or standby, when the outlet air temperature sensor reads a temperature of 40°F or lower the **ecosmart** will bring on the circulating fan and energize the pump relay. If in cooling mode, the **ecosmart** will also turn off the condenser by breaking the CC connection.

Pump Exerciser

- The circulating pump is exercised for 1 min every 24 hr when the **ecosmart** is OFF, COOLING (Y), COOLING2 (Y2) or FAN (G) to prevent the possibility of ‘sticking’ due to sediment and to meet local codes.

- During the 1 min pump on-time, the fan is turned off and resumes once the pump exercising is completed.

- Pump runs continuously if the outlet air temperature drops below 40°F to prevent the chance of freezing.

ZONING SECTION

INTRODUCTION

The HVP-3ZONE provides intelligent high velocity air distribution and supports up to 3 zones. Each zone is intended to service a floor/zone of the building with an associated local thermostat. For example: usually the 'master' thermostat would be located in the most commonly used space with 'zones' located on/in other floors/zones.
When mounting the zone dampers directly on top of the **ecosmart**, the standard single hole supplied top cover is replaced by a multi-port 2 or 3-hole cover (see Figure 2 – available multi-port top cover variations).
Alternatively, an open top remote variation (REM model) can be used with a standard rectangular plenum to which round duct is installed. The 6in or 8in dampers installed along the round duct can be located up to 50ft away from the HVP-3ZONE.

FEATURES

- The HVP-3ZONE consists of one 'master' and up to two 'zone' thermostats. The 'master' thermostat determines whether the system is in heat or cool mode and the 'zone' thermostats operate according to whichever mode the 'master' is in.
- Any thermostat can initiate heating, cooling (based on 'master' selection) or fan via a 'first come first served' scheme. A zone call for heating or cooling will have priority over the fan function from any zone.
- Thermostats for 'master' and 'zone' can be any normal variety <u>without heat/cool anticipators</u>. HVP-3ZONE wiring supports R, W, G, Y, and C (for 'smart wi-fi-type' thermostats).
- Supports standard, two stage and variable types of condensers using intelligent algorithms to prevent coil freeze up.
- Dampers can be mounted to special top covers of **ecosmart** air handlers or be remotely installed on take-off piping from the main plenum. Refer to Figure 2.
- Simple and quick installation - dampers are connected to the HVP-3ZONE controller using standard RJ11 telephone cables and can be located up to 50ft away.
- Each Zone can be 'doubled up' to drive two dampers using a common telephone line splitter plugged directly into the HVP-3ZONE controller – (for example: one damper for supply air and another for return air).

INSTALLATION

- Insert collars into multi-port top cover.
- Insert damper assemblies on to collars.
- If dampers are to be remotely mounted, (dampers are installed on round ducting attached to rectangular plenum)
- Connect HVP-3ZONE to thermostats, dampers and other accessories as required – refer to HVP-3ZONE wiring.
- Dampers are connected with supplied 7ft telephone cables (optional 25ft cables are available). Cables up to 50ft may be used if installation requires.
- Thermostat: normal type with AUTO/FAN and COOL/OFF/HEAT functions.
- Connect 'master' thermostat to terminal block labelled 'Master Zone'. Master thermostat is usually located on the main floor of the building. Connect up to 2 'zone' thermostat(s) to terminal block(s) labelled 'Zone 1 and Zone 2. Zone 1 and 2 thermostats are usually located on the other floors.
- Install freeze protection temperature sensor 20012 to suction line of cooling coil with tie straps provided and insulate. Sensor is connected to terminal block marked 'Freeze Sensor'.

INSTALLING TWO DAMPERS PER ZONE

Adapter RJ11 male to dual female P/N 20014 may be used to connect two dampers to the same port on the control board. This feature allows supply and return airflow to be controlled simultaneously resulting in better air control within a zone.

OPERATION

On powerup, the HVP-3ZONE goes through an initialization process as follows:

- All 3 dampers open fully.
- If no thermostats are calling, dampers will close according to the value specified in the 'Zone Close Switch' section.
- **The 'master' needs to be <u>run</u> in heat or cool mode momentarily for the HVP-3ZONE to recognize and store the current mode of operation. The information is permanently stored. In the event of a power failure the control will start up in the last mode of operation prior to the power failure.**

- All of the thermostats operate equally on a 'first come first served' basis.

- **<u>The 'master' determines whether the system is in heating or cooling mode.</u>**

- Master and zone thermostats independently control their own dampers.

- The HVP-3ZONE utilizes a dynamic control strategy and the power does not have to be cycled on and off for the changes to take effect. Changes take effect in about 10 seconds.
- **Heating and cooling take priority over fan operation.**

System Off

- Master/zone thermostats are 'off' or not calling. Zone dampers are set to the closed position. **ecosmart** is off.

Fan

- Master/zone thermostats set to 'fan'.
- Any thermostat with fan 'on' starts the fan on the ecosmart. Any thermostat that has fan 'on' has its damper open; other thermostats with fan on 'auto' have their dampers closed as per their set closed positions.

HRV INTEGRATION

Heat Recovery Ventilator (HRV) can be integrated into the system by connecting the HRV dry contacts to the G and R thermostat connection for one of the zones. It is recommended to connect the HRV to the thermostat controlling the largest zone.

When the HRV turns on during its 'timed on' period, the fan function of the **ecosmart** air handler will turn on to distribute fresh air within the ducting. If the **ecosmart** is already heating or cooling, the fan will already be on.

ZONE CLOSE SWITCH

The amount each zone closes is set using the 'Zone Close' switch

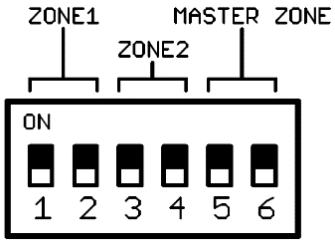

AIR FLOW	ZONE 1 DAMPER ZONE 2 DAMPER MASTER ZONE DAMPER	SWITCH 1 SWITCH 3 SWITCH 5	SWITCH 2 SWITCH 4 SWITCH 6
	Fully Closed	ON	ON
	62% Closed	OFF	ON
	33% Closed	ON	OFF
	18% Closed	OFF	OFF

ZONE OPTIONS SWITCH

Option switches 1 and 2 determine the type of condenser being used.
Switch 3 forces all dampers to the open position when calibrating HVP **ecosmart**. (Thermostats are non-functional in this mode). After calibration set, switch 3 to the OFF position.

OPTIONS	SWITCH 1	SWITCH 2	SWITCH 3	Notes
Standard condenser	OFF	OFF	X	Condenser runs when Y is energized
Two Stage Condenser	ON	OFF	X	Condenser runs on high when Y is energized and low when Y2 is energized
Variable 'inverter' condenser	OFF	ON	X	Condenser is variably controlled by PWM duty or 0-10V command
Force all dampers to open position	X	X	ON	Used when calibrating HVP **ecosmart** Thermostats inoperable

CONDENSER FREEZE PROTECTION

Standard Condenser Freeze Operation

HVP-3ZONE supports standard, two stage and variable speed 'inverting' condensers. A freeze protection sensor is attached to the suction line of the cooling coil and monitors temperature to prevent freeze up.

Condenser is wired between 'Y' and 'CC'.

Freeze protection sensor 20012 is attached to cooling coil suction line with tie straps and insulated.

- Below 40°F, condenser turns off. **ecosmart** fan runs to thaw cooling coil.
- Above 50°F, condenser turns on.
- When thermostats are satisfied, dampers close after 30 seconds, allowing time for the **ecosmart** to extract all the stored energy prior to shut down.

Two Stage Condenser Freeze Operation

Condenser is wired between 'Y' and 'CC' and 'Y2' and 'CC'.

Freeze protection sensor 20012 is attached to cooling coil suction line with tie straps and insulated.

- Above 50°F, HVP-3ZONE switches to 'Y' for cooling (high rate of cooling).
- Below 40°F, HVP-3ZONE switches to 'Y2' for cooling (low rate of cooling).
- When thermostats are satisfied, dampers close after 30 seconds, allowing time for the **ecosmart** to extract all the stored energy prior to shut down.

Variable 'Inverting' Condenser Freeze Operation

Depending on the type of interface required by the variable condenser, the HVP-3ZONE provides two control output interfaces: 0 to 10V and PWM which operate simultaneously and are connected as follows:

For 0 to 10V control: Condenser is wired between 'COM' and '10V' on tabs VARCOND

For PWM control: Condenser is wired between 'COM' and 'PWM' on tabs VARCOND

Freeze protection sensor 20012 is attached to cooling coil suction line with tie straps and insulated.

- Above 50°F, HVP-3ZONE increase PWM to 100% and 0 to 10V to 10V until condenser runs at maximum.
- Below 40°F, HVP-3ZONE decreases PWM to 10% and 0 to 10V to 1V until condenser runs at minimum.
- Below 32°F, HVP-3ZONE decreases PWM to 0 and 0 to 10V to 0V.
- When thermostats are satisfied, dampers close after 30 seconds, allowing time for the **ecosmart** to extract all the stored energy prior to shut down.

MAINTENANCE AND TROUBLESHOOTING SECTION
HVP 3-ZONE PART NUMBERS FOR ORDERING

HVP-3ZONE can be customized using the HVP 3-ZONE Line Items chart.

Air duct damper 6in 22017 or Air duct damper 8in 22018 – up to Qty. 3

Cable assy. HVP-3ZONE damper 7ft 20011, 25ft 20013 – up to Qty. 3

Cable assy. HVP-3ZONE freeze sensor 20012 10ft
(includes Cable Tie 7.5” 19027 Qty.2)

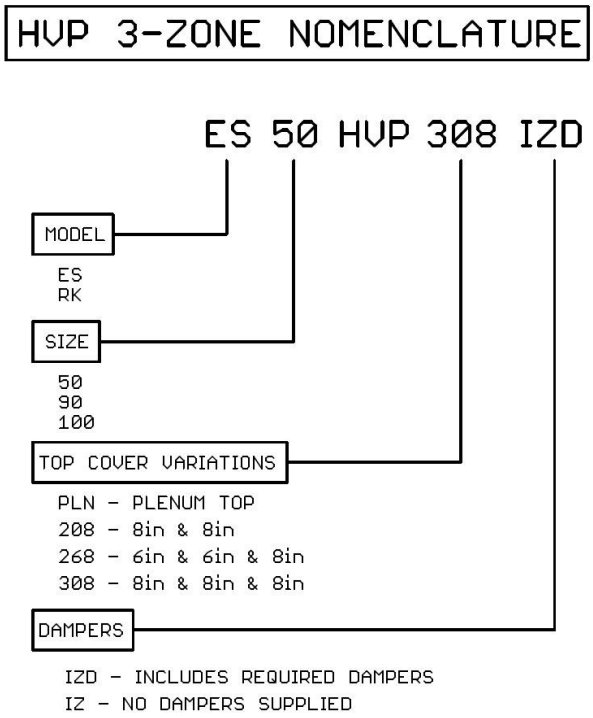

HVP-3ZONE Nomenclature

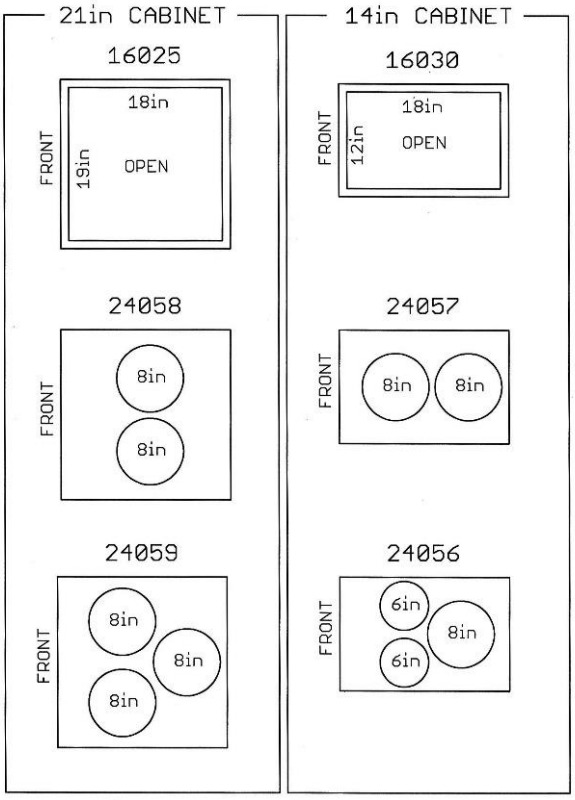

HVP-3ZONE multi-port top cover variations

P/N	Description
16051	Spin-on collar 6in
16067	Spin-on collar 8in
16068	Spin-on collar 10in
22017	Air duct damper set 6in
22018	Air duct damper set 8in
20011	Cable assy. Zonesmart damper RJ11 4-cond 7ft
20013	Cable assy. Zonesmart damper RJ11 4-cond 25ft
20014	Adapter RJ11 male to dual female
16030	Top cover square opening 14in
24057	Top cover HVP 14in 2x8in ports
24056	Top cover HVP 14in 2x6in, 1x8in ports
16025	Top cover square opening 21in
24058	Top cover HVP 21in 2x8in ports
24059	Top cover HVP 21in 3x8in ports
20012	Cable assy. Zonesmart freeze sensor 10ft

HVP-3ZONE line items

MAINTENANCE

Filter

Inspect the filter monthly and replace, remove and vacuum or rinse as required. A clogged or inadequate filter may void product warranty. Replacement filter size is 16 x 20 x 1.

Coils

Air conditioning and heating coils should not require cleaning if the filter maintenance schedule is adhered to. If a filter is damaged or collapses from plugging, dust may foul the coils. If this happens, replace the filter and carefully vacuum the coils. The coils may need to be removed to gain access to the face of the heating and cooling coils.

Fan and Motor

Check fan for dust once a year. If dirty, vacuum or wash to remove dust. Keeping the fan blades clean will reduce noise and improve capacity and efficiency of the heating system.

TROUBLESHOOTING

Thermostat call error

If the **ecosmart** does not run when the thermostat is calling, jumper R to W for heating or R to Y (Y2) to verify if the problem is with the thermostat or **ecosmart** control. Note that some thermostats have a delay (typically five minutes) before they will re-start cooling to prevent compressor damage.

Water heater temperature and pressure relief valve is weeping

A check valve or back-flow preventer may have been installed in the system. Consult water heater manufacturer's instructions. Optionally install an expansion tank.

Cold water at hot faucet

When the heat source is a water heater, the most probable cause is reverse flow through the heating loop from a stuck check valve - repair or replace valve.

Fan runs for cooling but not for heating

The room thermostat may be connected improperly. Refer to Electrical section or wiring schematic on **ecosmart** for proper installation.

Fan continues to run in cooling mode when thermostat is satisfied

The condenser shuts off but the **ecosmart** fan continues to run. This is often caused by older thermostats that have built-in heat anticipators. When cooling, the heat anticipator, in parallel with the thermostat contacts, allows a small current to flow to the **ecosmart** control board, keeping the fan on. The contactor in the condenser shuts off because it requires more current to stay on. Solution: replace with a modern thermostat which has no heat anticipator.

Fan not running

The fan is driven by a variable speed EC motor. The PWM (Pulse Width Modulation) signal generated by the control board at connector has a frequency of 80Hz and an amplitude of 24V and can provide up to 64 speed settings (0 to 100% duty). To determine if the fault is with the control board or the motor, follow these steps:

1. Apply power. POWER indicator should light.
2. No power – check door switch

3. No power – check output of 24VAC transformer
4. No power – check control board 3A fuse
5. Jumper R to G to bring on fan
6. Check if FAN indicator lights. Light intensity increases with fan speed. If indicator does not light, replace control board.
7. If fan still does not run, check for 120VAC on power connector at motor
8. If power is still not present, check continuity of motor power cable
9. If fan still does not run, check continuity of motor control cable
10. If fan still does not run, replace fan motor

Fan is noisy when vents are closed

Check that CPT is enabled, and that heating and cooling calibration has been done correctly. If heating and cooling airflow setting has been changed, re-calibration is required.

Smart/WiFi thermostat not working properly

Standard digital thermostats usually have internal batteries and do not require external power.
Smart thermostats may require a constant source of external power for proper operation. Use the C connection on the thermostat terminal blocks.
For condenser contactor power, use the 'CC' connection which is on when cooling and the air out temperature sensor is above 40°F.

External pump does not run (sticking issue)

In areas where hard water is present the pump may stick and fail to run. Often, closing the isolation valve on the return leg and opening the drain port so that water flows through the pump can free this. If this fails to free the pump, removal for cleaning or replacement is necessary. The daily pump exerciser will help prevent pump sticking.

External pump does not run (electrical issue)

Two types of pumps can be used with the **ecosmart**: standard 120VAC pumps or variable speed pumps with a 0-10V control voltage input.

1. Jumper R to W
2. Relay will click on and 120VAC should appear on power connector
3. 10VDC should also appear on 0-10V output for variable pump operation

External pump is noisy at start-up

If sound has not diminished within 1 minute, air may be present in the system and may need re-purging. If the heat source is a water heater, check to make sure branch connections for the heating loop are horizontal to prevent the collecting of air in the loop. Install air eliminating device at high point in system.

Insufficient or no heat

- Check that the heat generator is functioning properly
- Plugged air filter or coil. Refer to maintenance section for filter care and coil cleaning
- Air in heating loop - purge system
- Inlet and outlet connections to **ecosmart** are backwards - reverse connections
- Water heater dip tube is restricted or damaged; check and/or replace
- Supply water temperature set too low or not calibrated properly - check water temperature
- Restrictions on heating loop - remove restrictions, check if valve is stuck, isolation valves could be too restrictive or left partially closed after purging, or a closed valve

Heating during standby mode

Probable cause is thermal siphoning.

Pump and fan run continuously

Air out sensor monitors the temperature above the heating coil in the supply airstream and will turn on the pump and fan if temperature goes below 40°F.

- Make sure Air out temperature sensor plug is properly seated into board connector
- Sensor resistance should be approximately 10K at room temperature

Constant Pressure Sensing (CPT) not working

The HVP control board has an on-board solid-state pressure sensor. Air from the high-pressure side of the fan is fed via a silicone tube to the right-hand port of the sensor. The silicone tube on the left-hand port of the sensor is a reference vented outside the cabinet. Make sure to understand and follow the calibration procedure as outlined in the Calibration Procedure.

To check that sensor is functioning correctly, pull off the silicone tube from right-hand sensor port. The fan should gradually increase to its maximum value. Replacing the tube will result in the fan reducing speed to the calibrated value. This shows that the pressure sensor is working correctly.

If the calibrate procedure above fails to work, check if the silicone tubes are clear and there is no debris blocking the tube or the plastic inlet 'T' located on the centre plate and on the outside of the cabinet. If the system still does not work, then sensor is defective, and the board needs to be replaced.

As a workaround until the board is replaced, set OPTIONS switch 4 to the off position and the **ecosmart** will run in fixed airflow mode.

Zoning – Fan runs continuously

If the freeze sensor (included) is not connected, HVP 3-Zone assumes that the suction line of the DX coil has become too cold. In this case, the condenser is shut off and the **ecosmart** fan and pump run, drawing warm air through the DX coil to counteract freeze-up.

REMOVING BLOWER/CONTROL ASSEMBLY

Blower and control assembly can be removed as a single piece:

- Turn off power to **ecosmart**
- Disconnect power, thermostat and other wiring from within control box
- Disconnect the AIR OUT temperature sensor (white plug/socket) just above the control box enclosure. Slide out rubber grommet and pull wire up and out of the way to prevent damage when sliding out the assembly
- Undo (Qty. 2) #1/4-20 bolts, lock washers and flat washers
- Slide out blower assembly

CONTROL ASSEMBLY LAYOUT

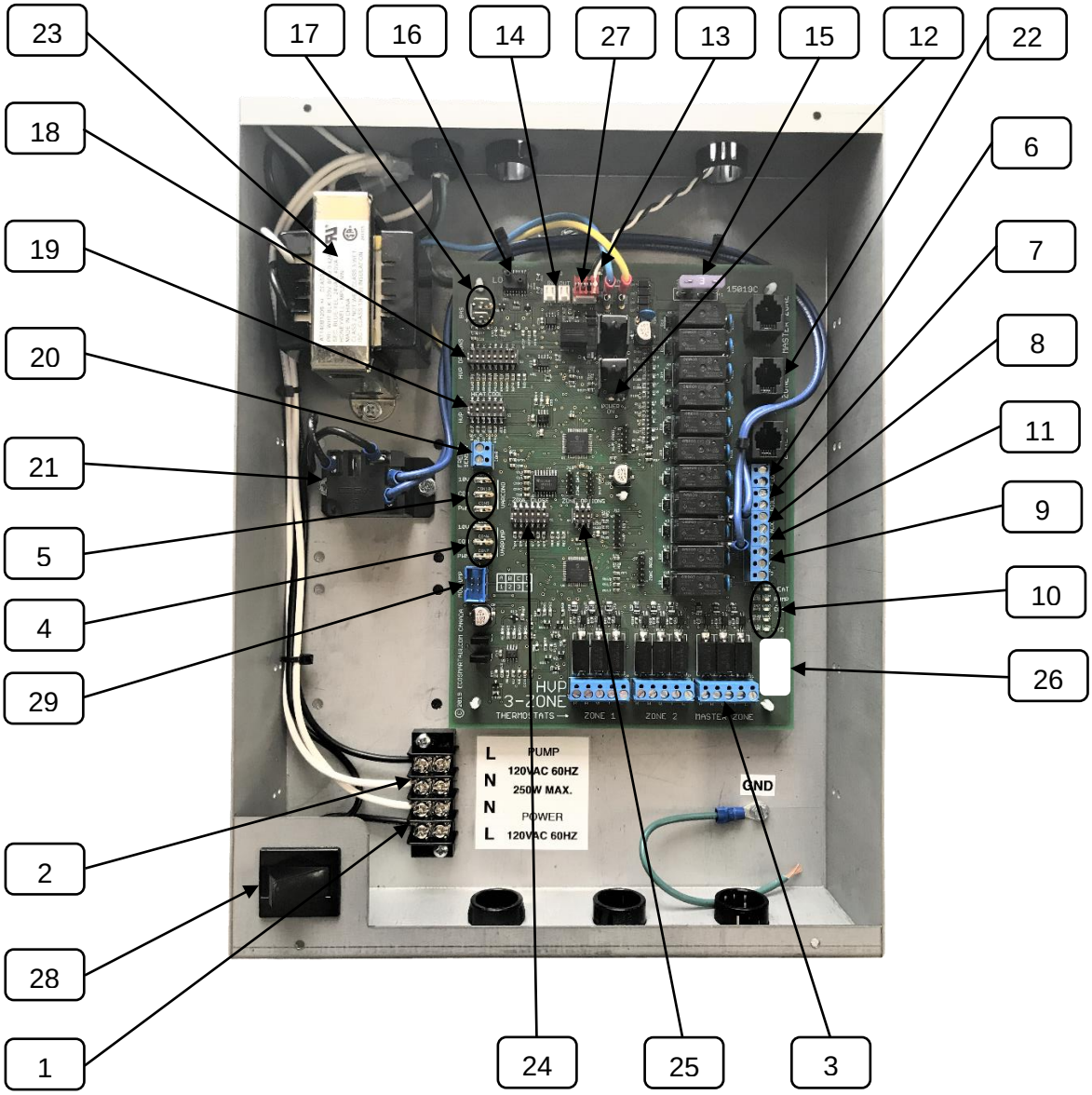

HVP 3-Zone Control Assembly

CONTROL ASSEMBLY LEGEND

1	120VAC 60Hz single phase power input
2	120VAC 250W Max. pump output
3	Thermostat connection: R, W, G, Y, C (Master, Zone 1 & Zone 2)
4	0-10VDC and PWM output for variable speed pump
5	0-10VDC and PWM output for variable speed condenser
6	Flow switch input for domestic hot water priority (active when closed)
7	Dry contacts to bring on boiler
8	Auxiliary 24VAC accessory output – active when heating
9	Condenser control: CC, Y, Y2
10	Indicators: HEAT, PUMP, COOL, Y, Y2
11	CT: Spare 'C' connection – on all the time
12	Indicator: POWER ON
13	Indicator: FAN (Brightness varies with fan speed)
14	Air in/out temperature sensors
15	Fuse 3A 32V ATO type
16	Pressure sensor
17	Building Automation System (BAS) input
18	HVP OPTIONS switch
19	HVP CFM Heat/Cool switch
20	Freeze protect sensor
21	Pump relay
22	Damper jack (Master, Zone 1, Zone 2)
23	24VAC 40VA transformer
24	ZONE CLOSE switch
25	ZONE OPTIONS switch
26	Software version identifier
27	Fan speed control
28	Door switch
29	Modulating pump controller P/N 15018 (optional)

Final Assembly - Exploded View

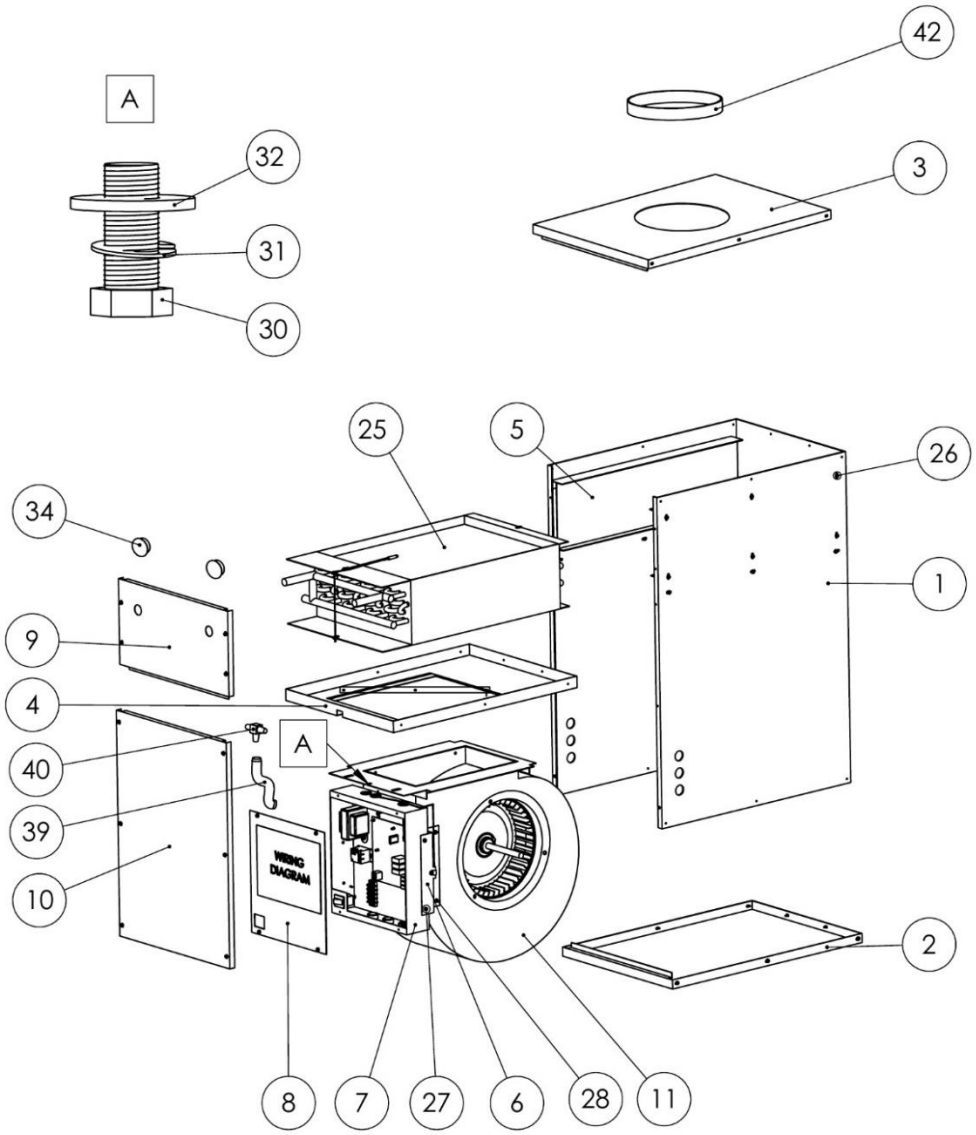

Electrical Box – Exploded View

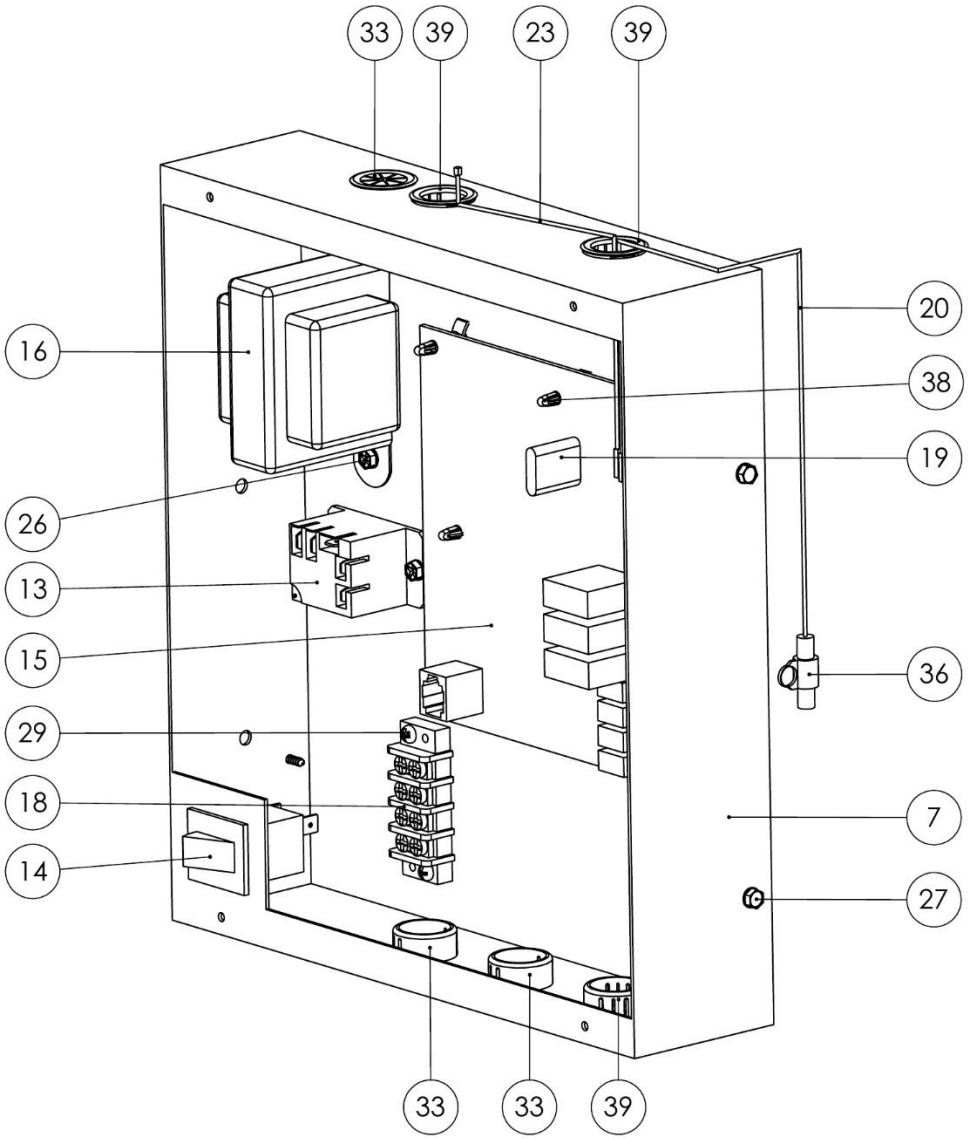

Blower & Heating Coil – Exploded View

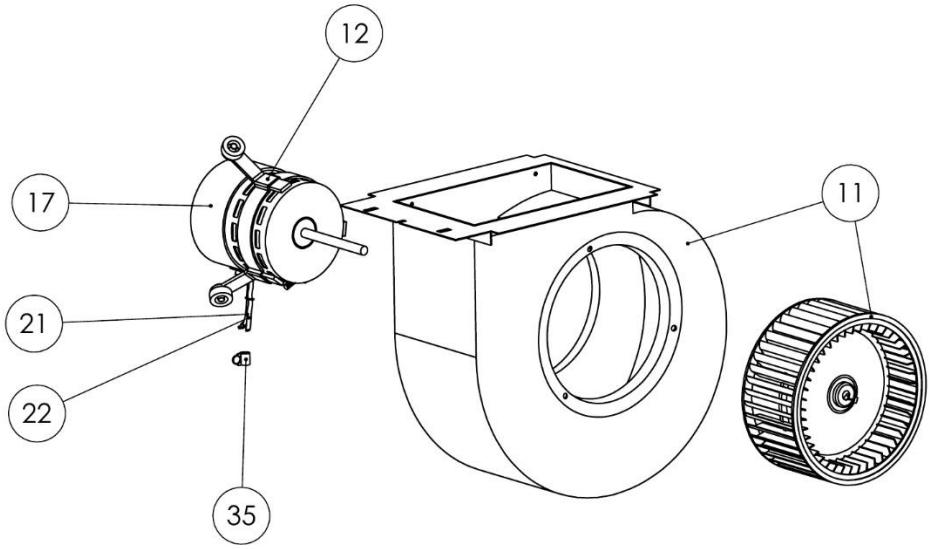

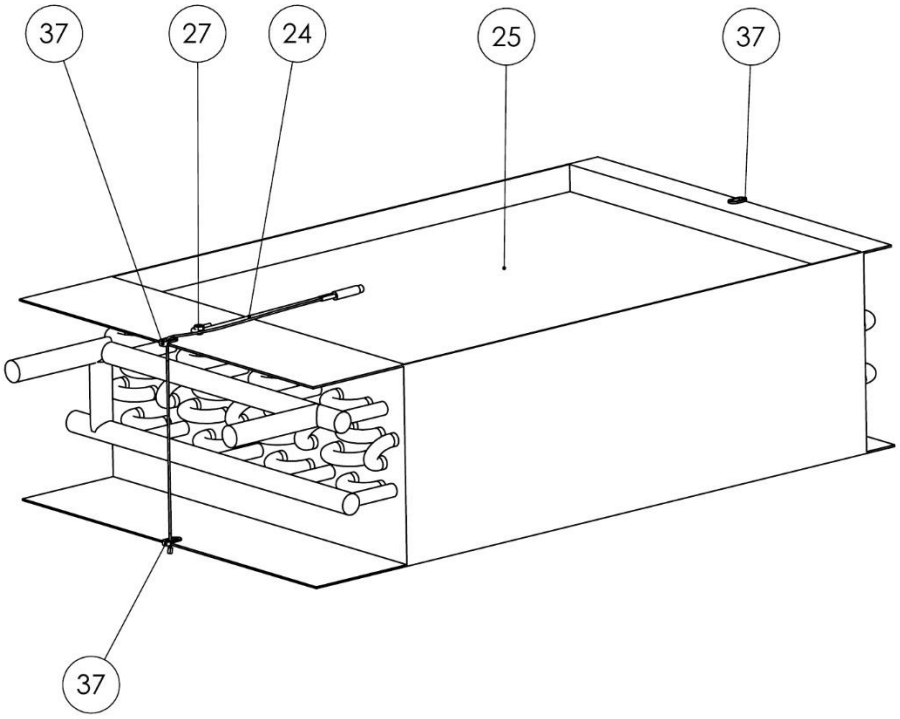

Replacement Parts

Replacement Parts HVP 3-ZONE Models					
Item	**Part Number**	**Part Number**	**Part Number**	**Description**	**Qty.**
	50HVP	**90HVP**	**100HVP**		
METALWORK					
1	24041	24042	24042	Wrapper insulated	1
2	24044	24045	24045	Bottom cover insulated	1
3	24053	24054	24054	Top cover insulated	1
4	16016	16003	16056	Centre plate	1
5	16005	16005	16005	Coil rail	2
6	16036	16006	16036	Electrical box support	2
7	16007	16007	16007	Electrical box	1
8	16008	16008	16008	Electrical box cover	1
9	24047	24048	24048	Upper door insulated	1
10	24050	24051	24051	Lower door insulated	1
BLOWER ASSY					
11	24008	24009	24010	Blower assy.	1
12	16035	16035	16035	Motor mount set BB-10-4 (short arm)	1
ELECTRICAL					
13	18010	18010	18010	Relay 24VAC 10A contact SPST	1
14	18000	18000	18000	Door Switch	1
15	1501950	1501990	15019100	PCA Ecosmart 3-Zone HVP Controller 24V	1
16	18001	18001	18001	Transformer 120VAC 24VAC 40VA	1
17	18008	18009	18009	Motor EC Perfect Speed 1800	1
18	18011	18011	18011	Barrier block 20A 4 pos	1
19	18020	18020	18020	Fuse 3A	1
WIRING					
20	20000	20000	20000	Cable assy. temp sensor 10K	1
21	20001	20001	20001	Cable assy. LVP/HVP motor control	1
22	20002	20002	20002	Cable assy. LVP/HVP motor power	1
23	20008	20008	20008	Cable assy. temp sensor extension	1
24	24032	24032	24032	Cable assy. supply temp sensor	1

Heating Coil					
25	17007	17003	17003	Hydronic Heating coil	1
HARDWARE					
26	19000	19000	19000	Screw Selftap #8 x 3/8in Type AB Hex/PHP Zinc	50
27	19001	19001	19001	Screw Selftap #8 x 3/8in Type B Slotted/Hex Serrated Zinc	10
28	19018	19018	19018	Screw Selftap #8 x 3/8in Type Selfdrill Hex Zinc	4
29	19011	19011	19011	Screw Selftap #6 x 1/2in Type A PNP Zinc	2
30	19015	19015	19015	Bolt 1/4 x 20 x 3/4in zinc	2
31	19016	19016	19016	Lockwasher 1/4in zinc	2
32	19017	19017	19017	Washer 1/4in zinc	2
33	19012	19012	19012	Bushing universal 0.875 blk	3
34	19007	19008	19008	Dome plug blk	2
35	19013	19013	19013	Cable clip 7/16in blk	1
36	19014	19014	19014	Cable clip 3/16in blk	1
37	19003	19003	19003	Grommet 0.625OD 0.312ID blk	4
38	19004	19004	19004	Control board support	4
39	19024	19024	19024	Silicone tubing	2
40	19023	19023	19023	Pressure inlet tee	2
41	19026	19026	19026	Bushing snap 0.875 blk	3
MISC					
	14018	14018	14018	Ecosmart HVP 3-ZONE Installation, Operations and Maintenance Manual	1

WARRANTY

Warranty is 3 years' parts. Visit **ecosmartair.com** for full details.